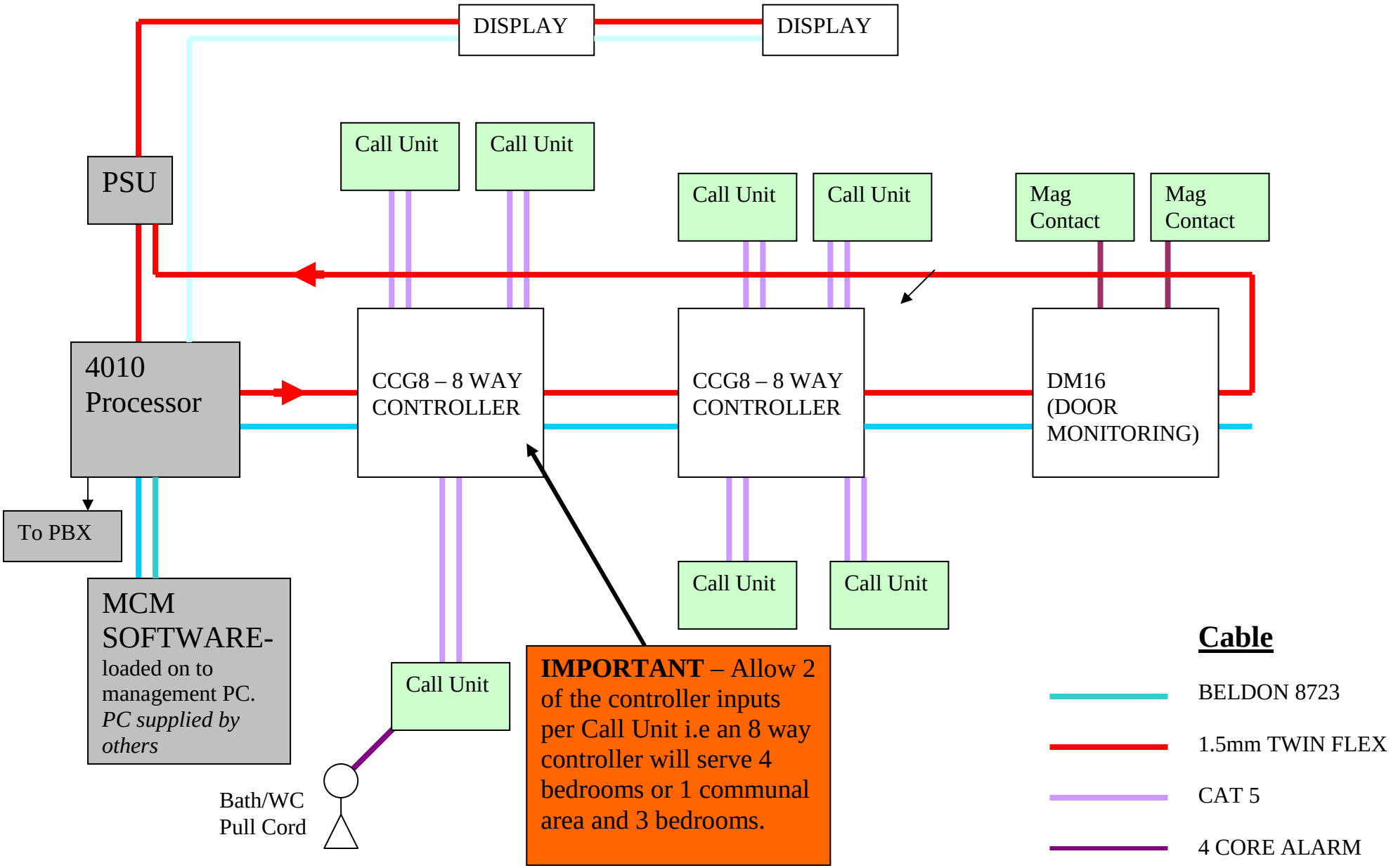Basic wiring schematic for Non-Speech Nursecall System